LOGIC HYDRAULIC CONTROLS INC

G–16A CAVITY VALVE BODIES

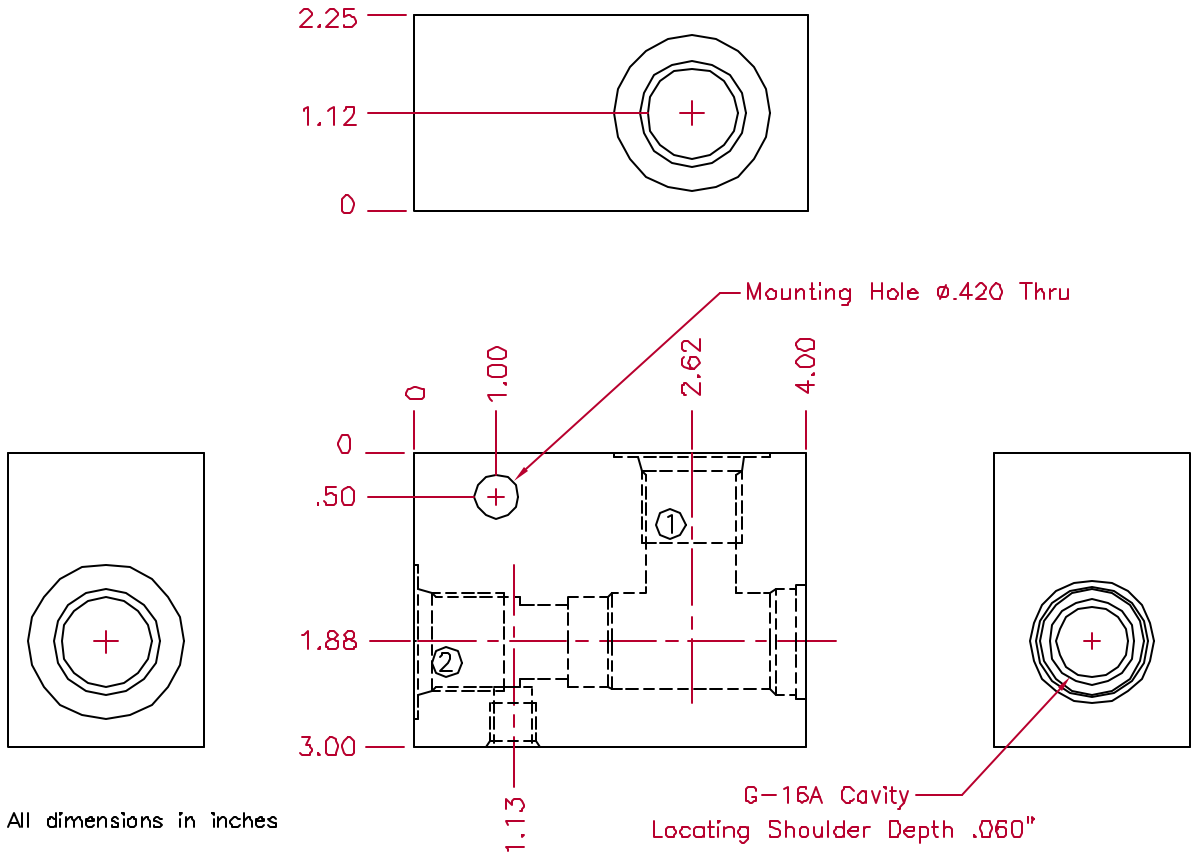

All dimensions in inches

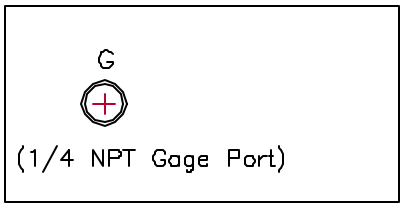

ORDERING INFORMATION

G16A – 6P A

Body Series

Port Size (1 & 2)
6P – 3/4 NPT
8P – 1 NPT
T12 – 3/4 SAE(#12)
T16 – 1 SAE(#16)

Block Material
A – Aluminum

Typical cartridges used with this body

GCV16 – *****

GCVA16 – *****

GPR16 – *****

6–07